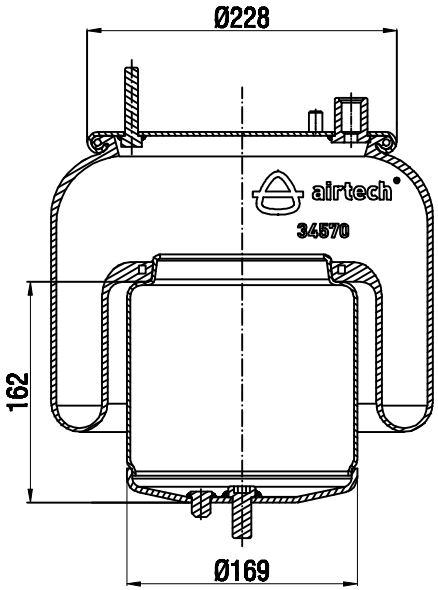

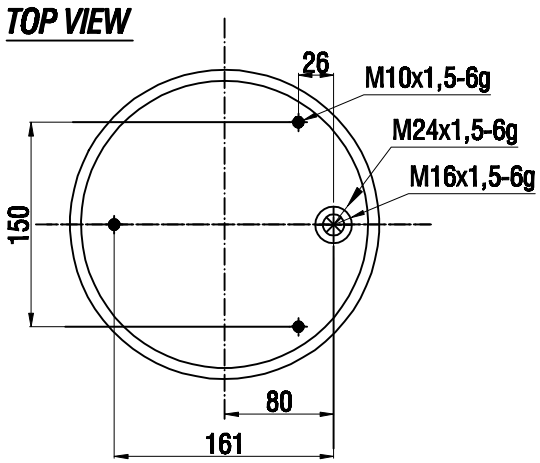

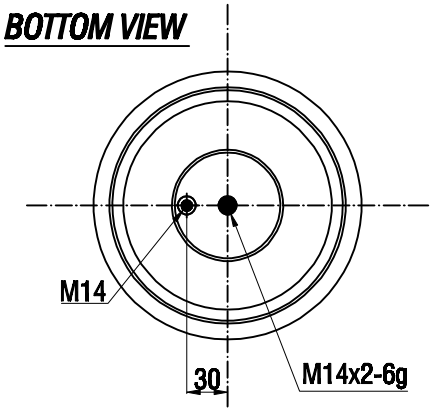

Drawings are prepared for catalogue study.

Changes					
0	First drawing	29.06.2017			
Issue	Changes	Date	Drawn by	Checked by	Approved by

PART WEIGHT: ...Kg.	Do not scale this drawing	Bolt/Stud	Combo stud	Air inlet	Threaded hole
	All rights of this document are the property of AKTAŞ A.Ş. It cannot be used, copied, reproduced, made available in any third party in whole or part without written permission of AKTAŞ A.Ş.				ORDER NO:137622
PART NAME:	34570 K COMPLETE (AIRTECH)				aktaş