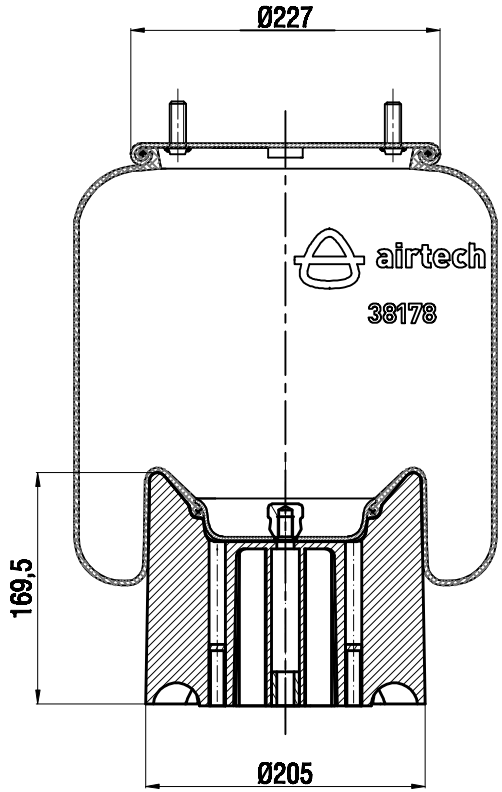

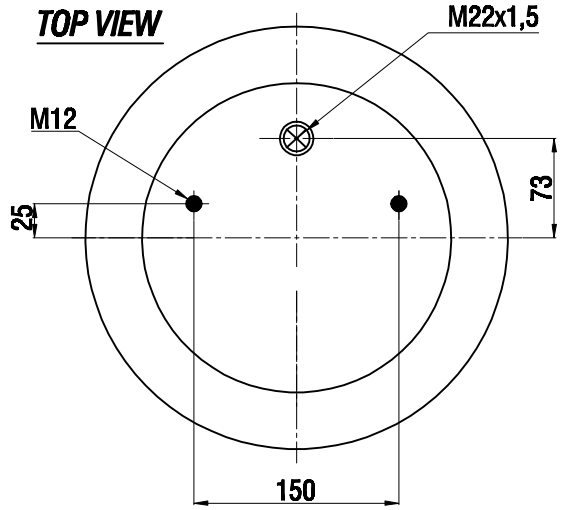

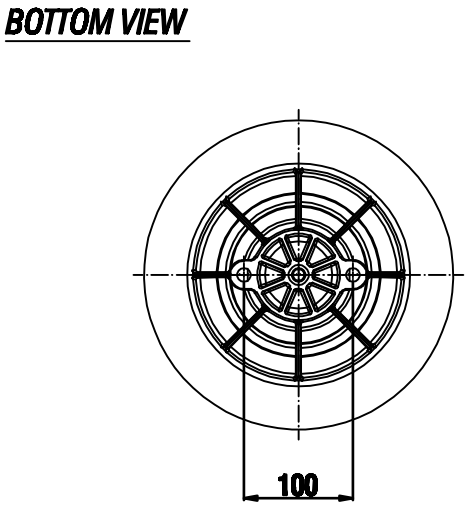

Drawings are prepared for catalogue study.

Issue	Changes	Date	Drawn by	Checked by	Approved by
0	First drawing	24.05.2016			

Changes

PART WEIGHT: — Kg.

Do not scale this drawing

Bolt/Stud · Combo stud · Air inlet · Threaded hole

All rights of this document are the property of AKTAŞ A.Ş. It cannot be used copied, reproduced, made available to any third party in whole or part without written permission of AKTAŞ A.Ş.

ORDER NO: 132572

PART NAME: 38178 KPP COMPLETE (AIRTECH)

aktaş