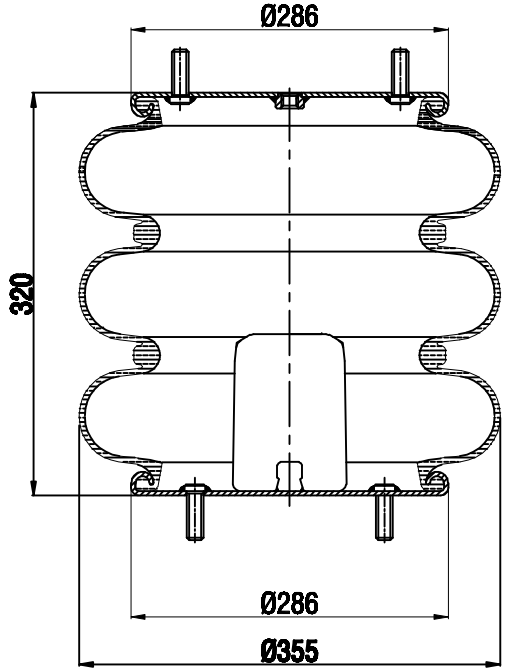

TOP VIEW

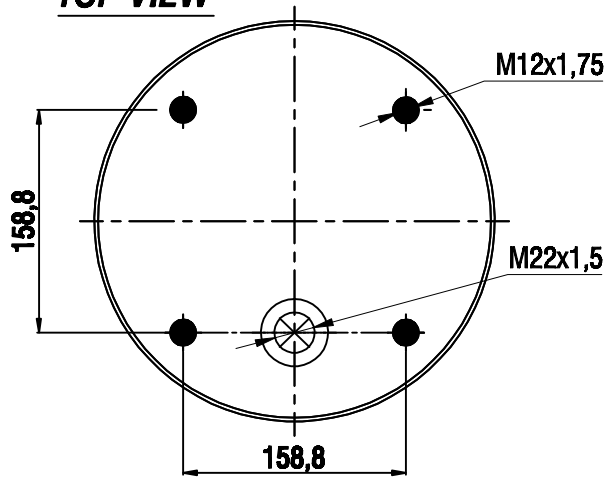

BOTTOM VIEW

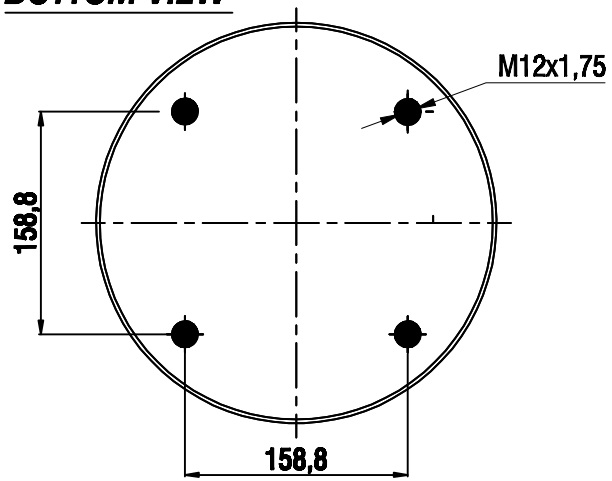

Drawings are prepared for catalogue study.

Changes					
0	First drawing	28.05.2014			
Issue	Changes	Date	Drawn by	Checked by	Approved by

PART WEIGHT: ...Kg.	Do not scale this drawing	Bolt/Stud	Combo stud	Air inlet	Threaded hole
		All rights of this document are the property of AKSBA A.Ş. It cannot be used, copied, reproduced, made available to any third party in whole or part without written permission of AKSBA A.Ş.			ORDER NO: 140725
PART NAME:	A3 350/K01 Metalli Katlı Körük(Airtech)				aktaş