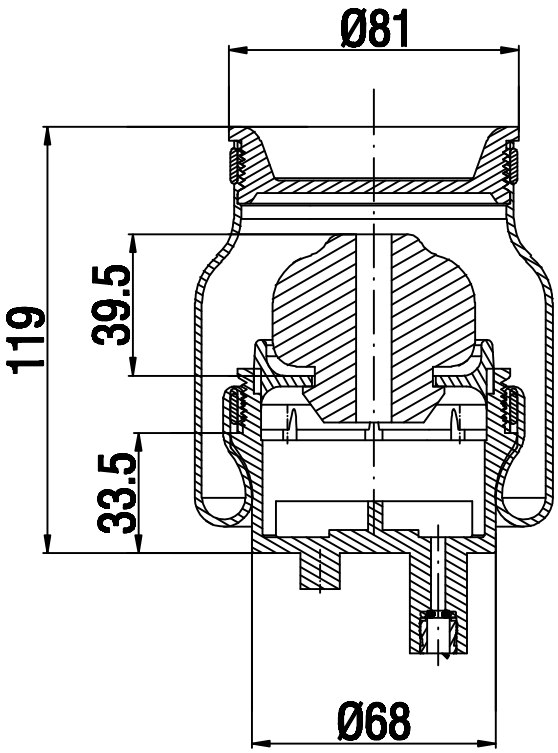


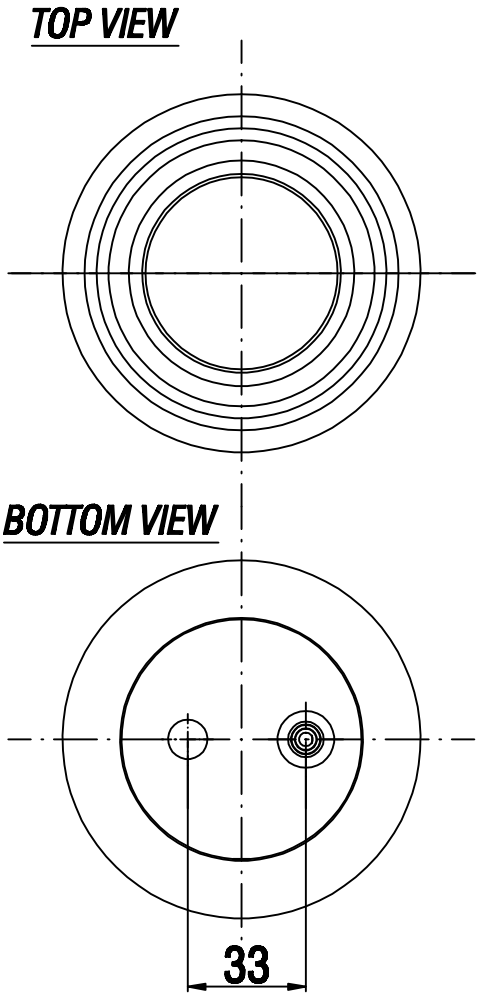


Drawings are prepared for catalogue study.

| Changes | | | | | |
|---|---|---|---|---|---|
| | | | | | |
| 0 | First drawing | 17.03.2014 | | | |
| Issue | Changes | Date | Drawn by | Checked by | Approved by |

| | | | | | |
|---|---|---|---|---|---|
| PART WEIGHT: ...Kg. | Do not scale this drawing | Bolt/Stud | Double stud | Air inlet | Threaded hole |
| | All rights of this document are the property of AKTAŞ A.Ş. Ismeredbe neither original, nor photocopied, made available to any third party in whole or part without written permission of AKTAŞ A.Ş. | | | | ORDER NO: 17000322 |
| PART NAME: | A 3001501 RVI Kabin Körüğü (Airtech) | | | | aktaş |