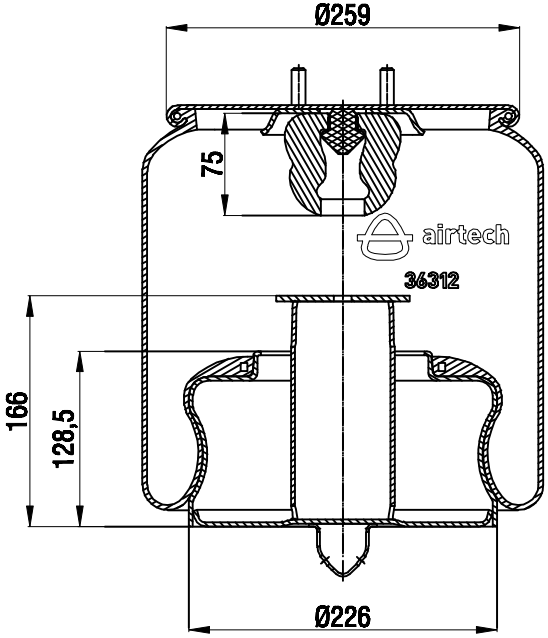

TOP VIEW

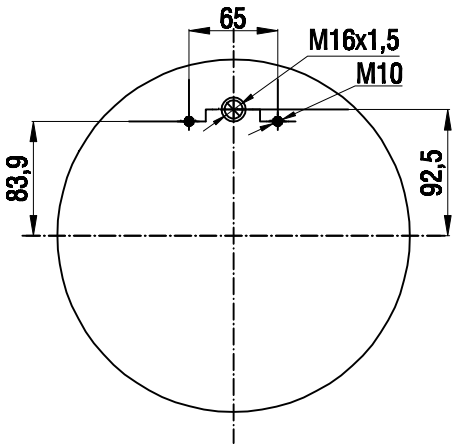

BOTTOM VIEW

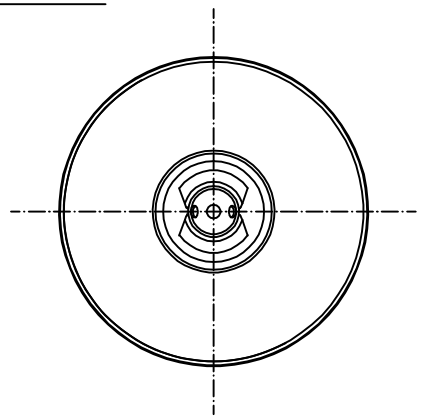

Drawings are prepared for catalogue study.

Issue	Changes	Date	Drawn by	Checked by	Approved by
0	First drawing	12.12.2012			

PART WEIGHT: ...Kg.

Do not scale this drawing

Bolt/Stud · Combo stud · Air inlet · Threaded hole

All rights of this document are the property of AKTAŞ A.Ş. It can not be used, copied, reproduced, made available to any third party in whole or part without written permission of AKTAŞ A.Ş.

ORDER NO:136662

PART NAME: 36312 K COMPLETE (AIRTECH)

aktaş