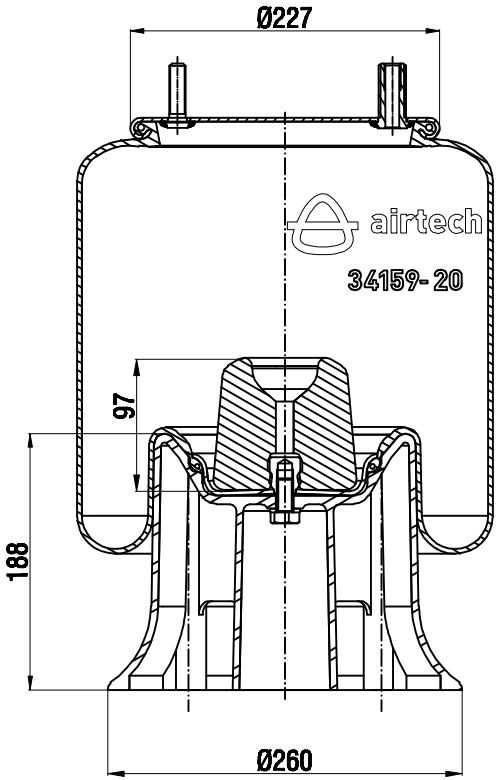


## TOP VIEW

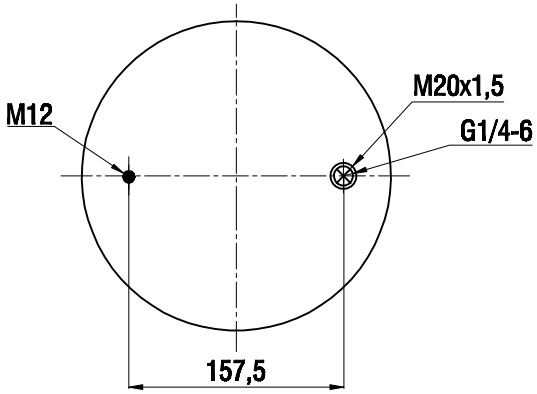


## BOTTOM VIEW

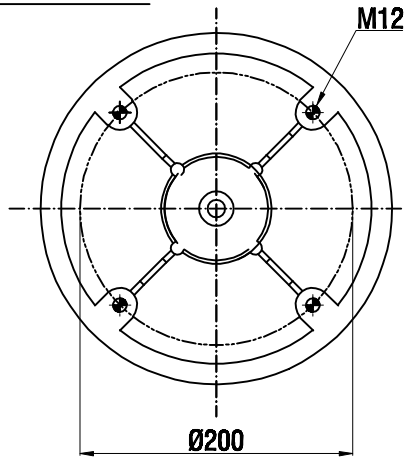


**Drawings are prepared for catalogue study.**

| Issue | Changes | Date | Drawn by | Checked by | Approved by |
|---|---|---|---|---|---|
| | | | | | |
| | | | | | |
| 0 | First drawing | 07.07.2009 | | | |

PART WEIGHT: 0 Kg.

Do not scale this drawing

● Bolt/Stud ⊗ Combo stud ⊗ Air inlet ◐ Threaded hole

All rights of this document are the property of AKTAŞ A.Ş. It cannot be used copied, reproduced, made available to any third party in whole or part without written permission of AKTAŞ A.Ş.

**ORDER NO: 136902**

PART NAME: 34159-20 K ALU Complete(Airtech)(095.0348)

aktaş