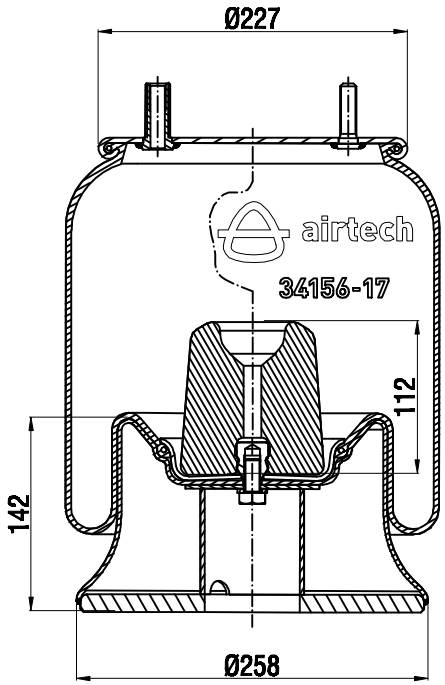

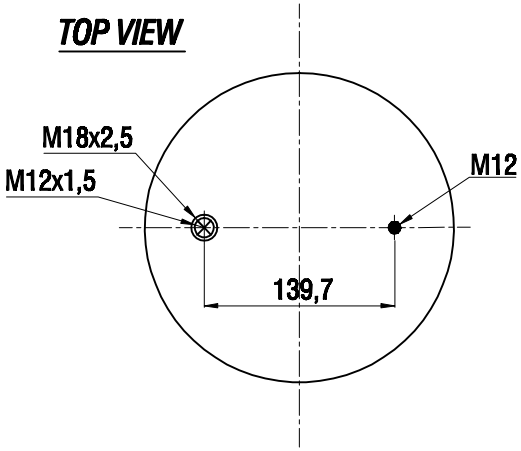

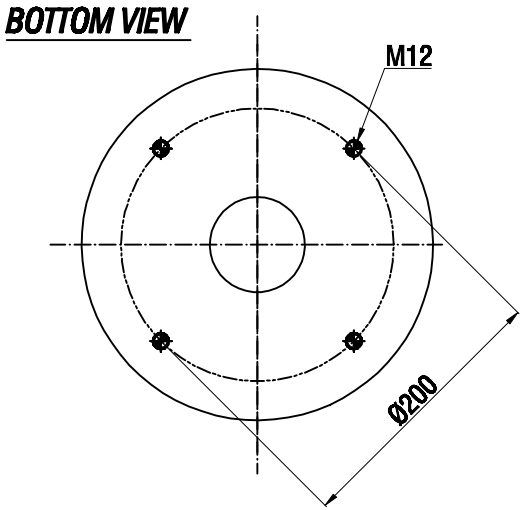

Drawings are prepared for catalogue study.

Changes					
0	First drawing	12.12.2012			
Issue	Changes	Date	Drawn by	Checked by	Approved by

PART WEIGHT: ...Kg.	Do not scale this drawing	Bolt/Stud	Combe stud	Air inlet	Threaded hole
	All rights of this document, are the property of AKTAŞ A.Ş. It can not be used copied, reproduced, made available to any third party in whole or part without written permission of AKTAŞ A.Ş.				ORDER NO:134662
PART NAME:	34156-17 K COMPLETE (AIRTECH)				aktaş