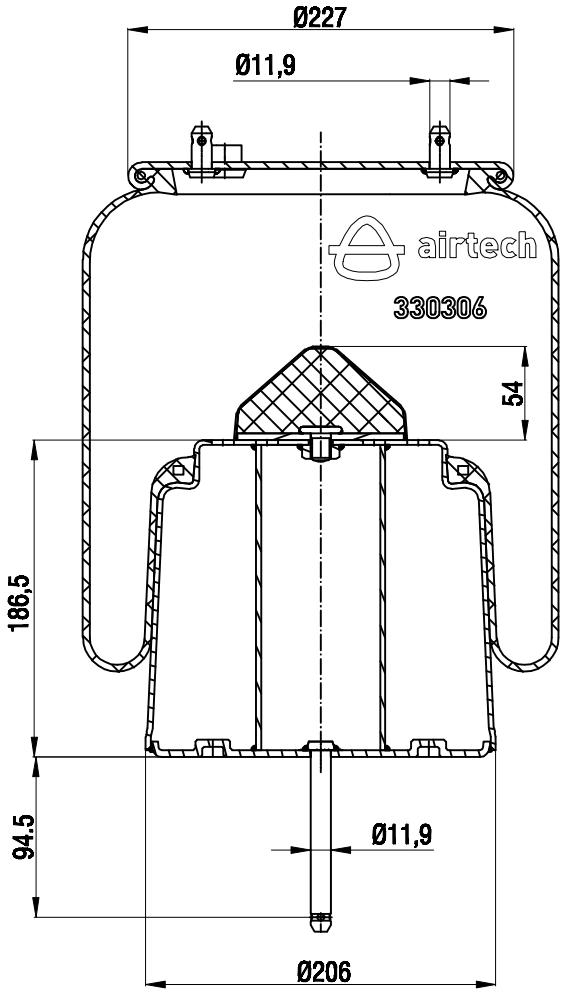

TOP VIEW

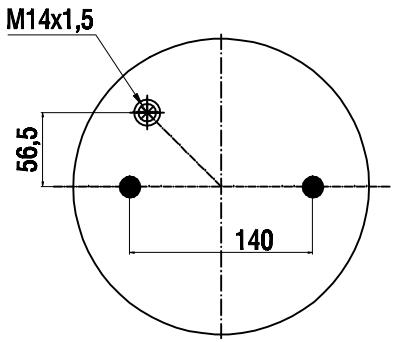

BOTTOM VIEW

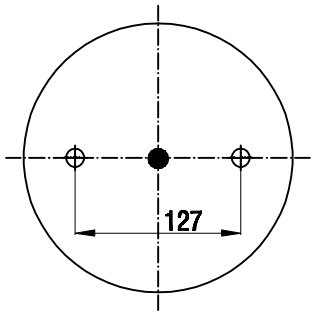

Drawings are prepared for catalogue study.

Changes					
	–		–		
0	First drawing	12.12.2012			
Issue	Changes	Date	Drawn by	Checked by	Approved by

PART WEIGHT: ...Kg.	Do not scale this drawing	Bolt/Stud	Combo stud	Air inlet	Threaded hole
	All rights of this document are the property of AKTAŞ A.Ş. Item cannot be used, copied, reproduced, made available to anything/anybody/whatsoever without written permission of AKTAŞ A.Ş.				ORDER NO:135482
PART NAME:	330306 K COMPLETE (AIRTECH)				aktaş