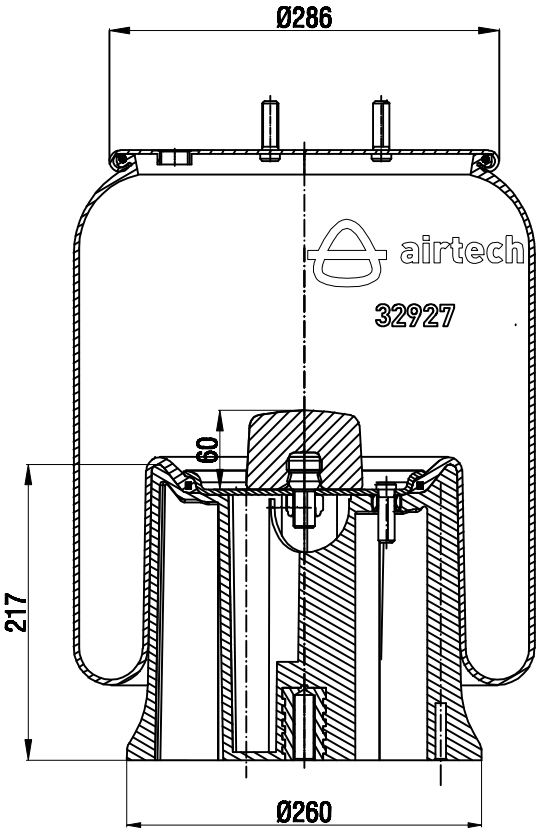

TOP VIEW

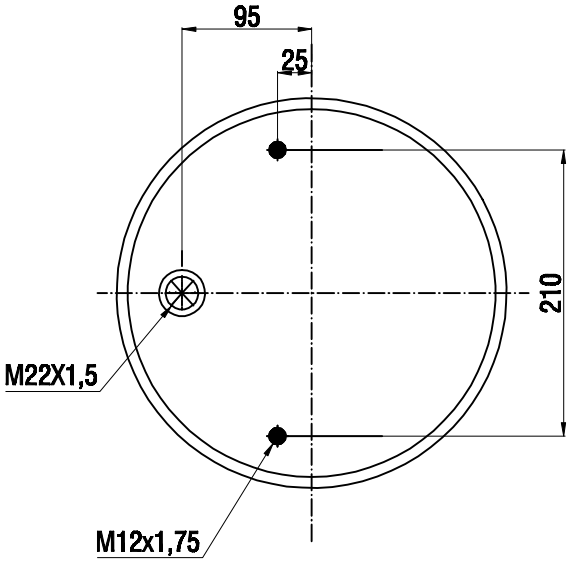

BOTTOM VIEW

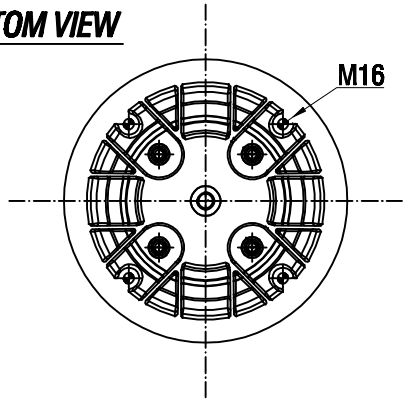

Drawings are prepared for catalogue study.

Changes					
0	First drawing	12.12.2012			
Issue	Changes	Date	Drawn by	Checked by	Approved by

PART WEIGHT: ...Kg.	Do not scale this drawing	Bolt/Stud	Carbo steel	Air inlet	Threaded hole
	All rights of this document are the property of AKTAŞ A.Ş. Issue not to be used, copied, reproduced, made available to any third party in whole or part without written permission of AKTAŞ A.Ş.				ORDER NO:137432
PART NAME:	32927 KPP COMPLETE (AIRTECH)				aktaş